EA42-7

Self Excited Automatic Voltage Regulator
For Use In Generators With Separate Power Windings

Compatible with Basler* AEC42-7 regulator

*All manufacturer names, numbers, symbols and descriptions are used for reference purpose only and do not imply that any part is the product of these manufacturer.

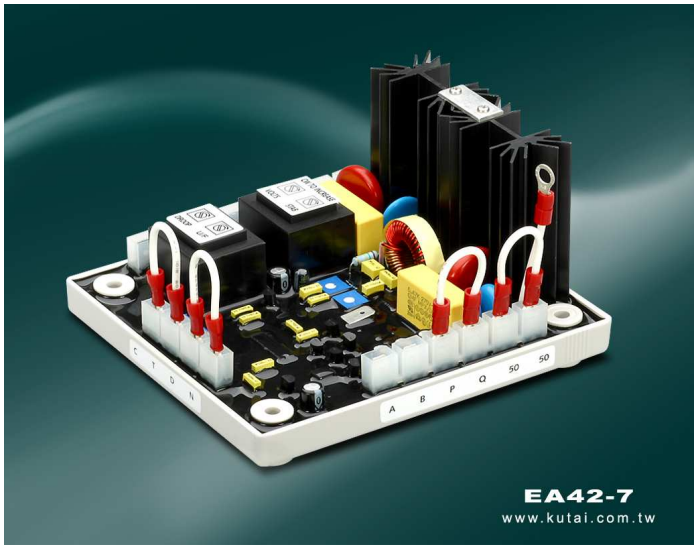

Features

- Voltage Regulation < ±1%
- Over Excitation Automatic Shut Down
- For Use In Parallel Operation
- EMI Suppression
- Under Frequency Protection
- Soft Start Voltage Ramping

Specifications

Sensing Input	Voltage	220~252 VAC ±10% 1 phase 2 wire
	Frequency	50/60 Hz selectable
Power Input	Voltage	220~260 VAC ±10% 1 phase 2 wire
	Frequency	50/60 Hz
Output	Voltage	Max. 42 VDC
	Current	Continuous 7A
		Intermittent 15A for 10 sec.
	Resistance	Min. 6 Ω Max. 105 Ω
Volts Regulation	< ±1% (with 4% engine governing)	
Voltage Build-up	Residual volts at AVR terminal > 5 VAC	

Voltage Adjustable Range	180~277 VAC
External Volts Adjustment	±10% with 1 KΩ 1 watt trimmer
Unit Power Dissipation	Max. 20 watt
EMI Suppression	Internal electromagnetic interference filtering
Thermal Drift	0.05% per ℃ change in AVR ambient
Under Frequency Protection	60 Hz system presets knee point at 55 Hz
(Factory Setting)	50 Hz system presets knee point at 45 Hz
Over Excitation Shutdown	Field volts shut down after time delay if exciter field volts exceeds 52±2 VDC
Quadrature Droop	Max. Sensitivity 1 VAC 2%
	Max. Input 5 VAC @ 5 Ω Burden

Environment

Operation Temperature	-40~60 ℃	**Relative Humidity**	Maximum 95%
Storage Temperature	-40~85 ℃	**Vibration**	1.5G @ 5~30 Hz / 5.0G @ 30~500 Hz

Mechanical Specifications *(Unit : mm)*

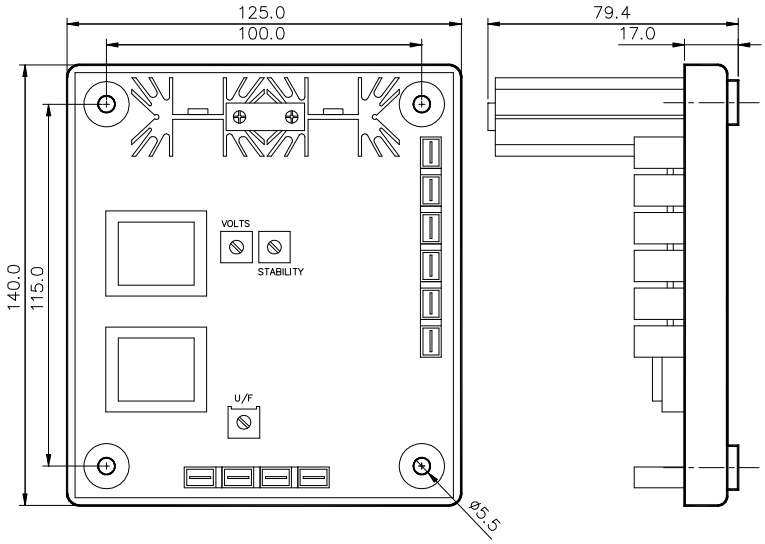

AVR Control Function

VOLT	Voltage Adjustment
STAB	Stability Adjustment
U/F	To Set the U/F*1 Knee Point

*1 U/F : Under Frequency protection

Physical Specification

Dimensions	140.0 (L) x 125.0 (W) x 79.4 (H) mm
Weight	680 g ±2%
Shock	Withstands up to 20G in each X, Y, Z axes

固也泰電子工業有限公司
KUTAI ELECTRONICS INDUSTRY CO., LTD.
ISO 9001 BSMI

TEL: +886-7-8121771 **FAX**: +886-7-8121775
Head Office: No.3, Lane 201, Chien Fu St., Chyan Jenn Dist., Kaohsiung, TAIWAN
Please link to **http://www.kutai.com.tw** for detailed manual.